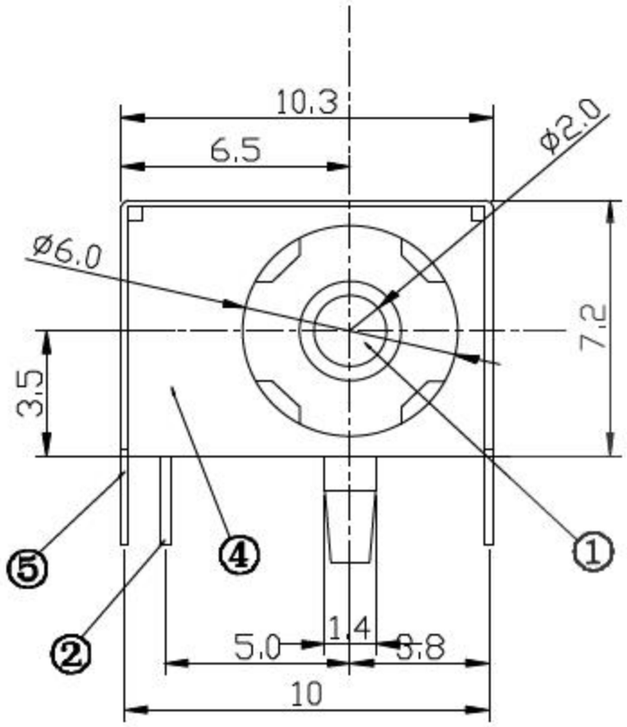

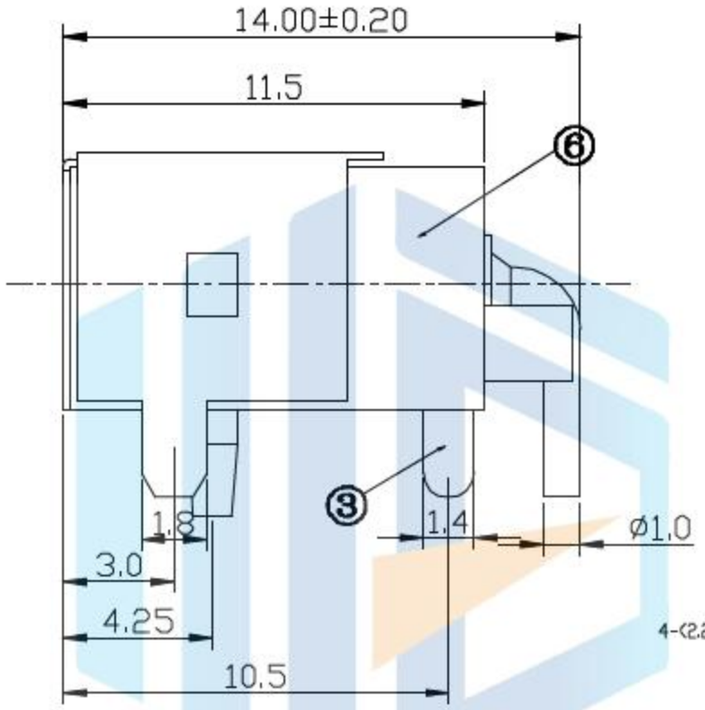

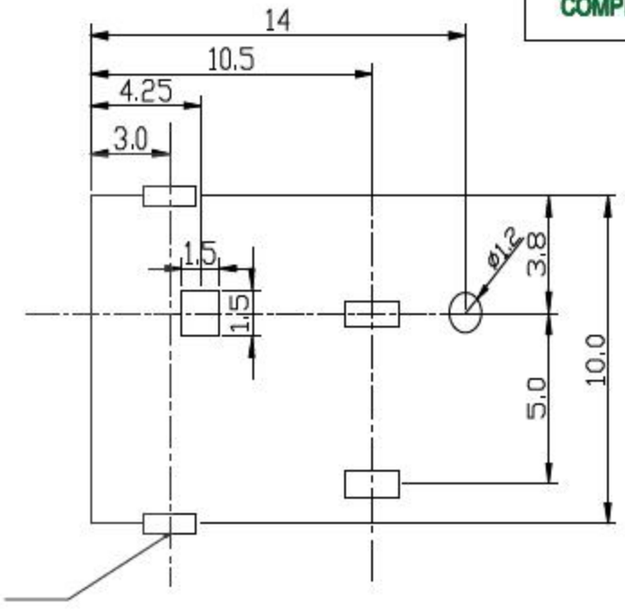

PCB LAYOUT
TOP VIEW (Tolerance:±0.05)

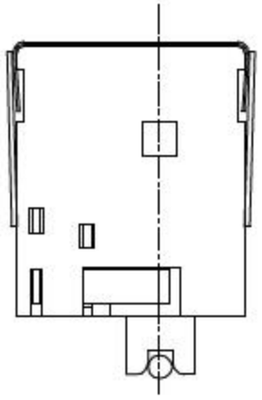

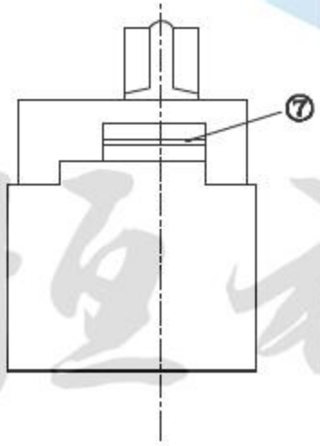

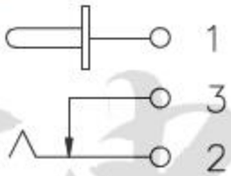

SCHEMATIC

SPECIFICATION
1.Rating : DC 20V 5A;
2.Contact resistance: ≤30mΩ;
3.Insulation resistance: ≥100MΩ (DC500V);
4.Withstand voltage: 500VAC ;
5.Insertion and extraction force: 3–30N;
6.life test: 5,000 cycles;
7.Operation temperature range:–20°C~70°C;
8.Preservative temperature range:–25°C~75°C;

设计:	Arvin: 2016.03.08	范围 Range	公差 Tolerance	东莞市恒祺电子科技有限公司	
审核:	Arvin:	X.X ±	X.X ±0.30		
校对:	Ru yi:	X.XX ±	X.XX ±0.20	名称:DC插座	型号: DC-044D
比例:	视角关系:	X.XXX ±	X.XXX ±0.10	料号:	
版次:	图框大小: A4	Angle ±	Angle ±5°	共 张 , 第 张	备注: